DL3000 DUST COLLECTOR

OPERATING MANUAL

Read this manual before operating machine

402540 Rev D

This manual provides all the information needed to use and service your dust collector. Good operation and durability depend on proper maintenance and careful use.

Before leaving the factory, this particular model has undergone stringent tests to ensure utmost reliability. Always check however to make sure the dust collector has not been damaged during transport in such a way as to affect operation and safety.

This manual should be considered an integral part of the dust collector and must be kept together with the unit until this is scrapped. In case of loss of or damage to the manual, ask ***National Flooring Equipment* (NFE)** for a new copy.

Some details shown in the illustrations in this manual may be different from those of your dust collector. Some component parts may have been removed for greater clarity.

This manual must be kept in a place accessible to all the personnel charged with operating and servicing the dust collector.

In case of any doubts, immediately phone **NFE customer service**.

Information section
1.1 Identification of main parts 4
1.2 Intended uses 5
1.3 Allowed environmental conditions 5
1.4 Noise level 5
1.5 Storage 5
1.6 Scrapping 5
1.7 Technical details 6
1.8 Warranty 7

Safety section
2.1 Safety details 8
2.2 Safety warnings 9
2.3 Safety plates and symbols 12
2.4 Outstanding risks 13

Installation section
3.1 Handling 14
3.2 Installation 15

Operation section
4.1 Description of controls 17
4.2 Work cycle 18
4.3 Removal and placing of the waste bag 20
4.4 Using the filter shaking system 21
4.5 Troubleshooting 22

1.1 Identification of main parts

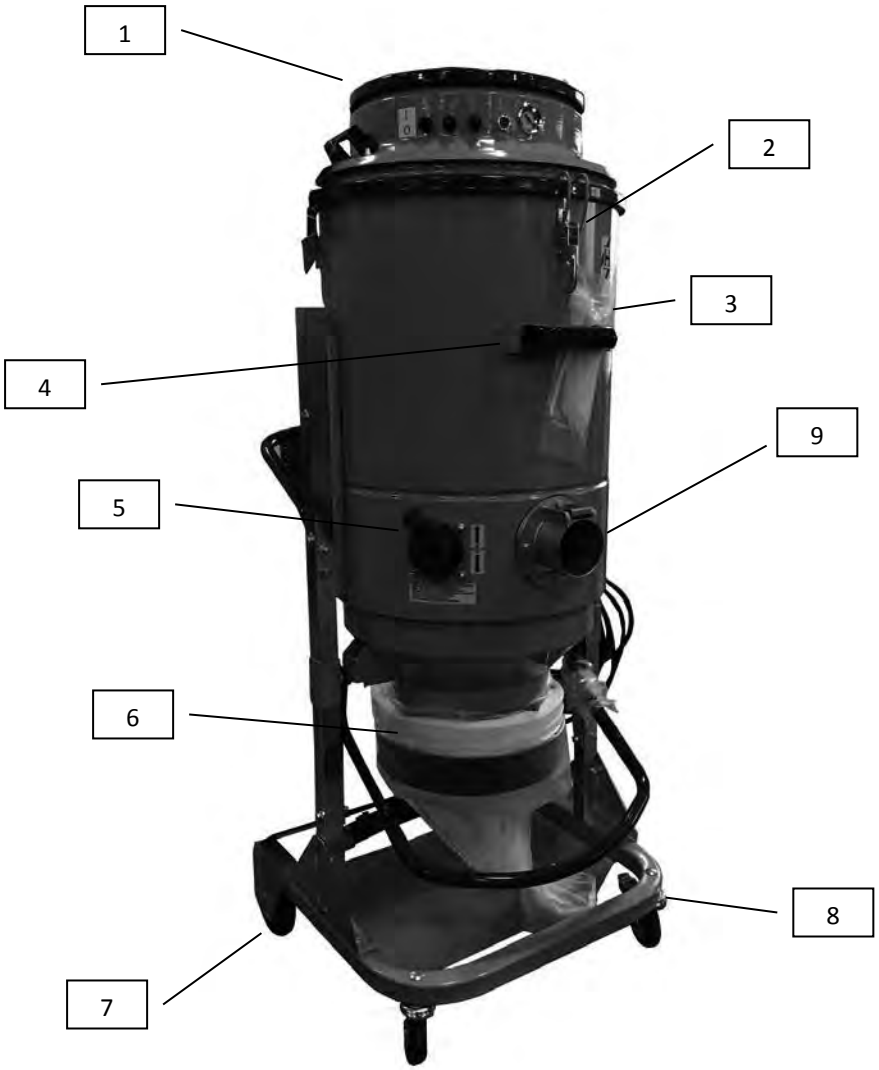

1) Motor head
2) Release fastening
3) Filtering chamber
4) Push handle
5) Filter shaking lever
6) Removable Longopac® container
7) Fixed wheels
8) Castors
9) Inlet

1.2 Intended uses

These specific dust collector models have been designed, built and protected for collecting dusts and solid materials only, using special filters.

Warning!
Always use specific filters for the type of dust or materials to be collected.

Any other use is considered ***IMPROPER***.
The dust collector is in any case intended for professional industrial use.

1.3 Allowed environmental conditions

In order for the dust collector to work properly, it must be protected against any inclement weather conditions (rain, hail, snow, fog, etc.). Only use in temperatures of 41°F to 113°F with a relative humidity less than 70%. The work environment must be tidy, well-lit, and devoid of explosive atmosphere.

1.4 Noise level

Sound tests performed on this specific dust collector model have been taken from a distance of 3.3 feet (1 meter) and from a height of 5.25 feet (1.6 meters), showing an acoustic pressure no higher than:

76 dB (A)

The vibrations transmitted by the machine are lower than 8.2 ft/s^2 (2.5 m/s^2).

Attention!
Workers exposed to sound pressure levels above 85 dB (A) must be protected by special individual protection devices.
It is therefore necessary, if such working conditions exist, to provide workers with such approved individual protection devices and to inform them of the risks relating to noise exposure.

1.5 Storage

Remove the filter and clean it, empty the Longopac® container and store the dust collector in a place protected against atmospheric agents with a temperature between 32°F and 104°F. Cover with a nylon sheet to prevent accumulation of dust.

1.6 Scrapping

In case of scrapping, all the component parts of the dust collector will have to be disposed of through adequate disposal channels in accordance with applicable legislation.
Before scrapping, all plastic and rubber parts will have to be separated from the electrical material. Parts made of plastic, aluminium and steel only may be recycled if collected by special centers.

1.7 Technical details

Power	***Hp***	4.6 Hp (3.45 Kw)
Voltage	***V***	230 V
Frequency	***Hz***	50/60 Hz
Current	***A***	15 A
Max. lift capacity	***in H_2O***	98.4” H_2O (2500 mm H_2O)
Max. air flow rate	***CFM***	318 CFM (540 m^3/h)
Noise level	***dB (A)***	76
Filter type		Polyester M
Filter surface	***ft^2***	32.3 ft^2 (30,000 cm^2)
Suction inlet	***Ø***	3.15” (80 mm)
Dimensions	***in***	24.4” x 24.4” x 63” (62 x 62 x 160 cm)
Weight	***lbs***	179.7 (81.5 kg)

1.8 Warranty

National Flooring Equipment Inc. (referred to as “the Company”) warrants that each new unit manufactured by The Company, to be free from defects in material and workmanship in normal use and service for a period of twelve (12) months from date of shipment from the Company. For administrative ease, will honor warranty for a period of fifteen (15) months from date of shipment from the company. Accessories or equipment furnished and installed on the product by the Company but manufactured by others, including but not limited to: engines, motors, electrical components, transmissions etc., shall carry the accessory manufacturers own warranty. Battery warranties are prorated over the warranty period. Customer is responsible for the inspection of equipment / parts upon delivery. Freight damages reported beyond authorized time frame will not be honored.

The Company, at its determination of defect, will repair or replace any product or part deemed to be defective in material or workmanship within specified warranty time period. All product determinations and / or repairs will take place at the designated Company repair facility, or at a certified warranty location designated by the Company. The Company will coordinate and be responsible for all freight expenses associated with valid warranty claims. Freight and shipping expenses associated with abuse or misuse will be back charged to the Distributor/Customer. The Company reserves the right to modify, alter or improve any part / parts without incurring any obligation to replace any part / parts previously sold without such modified, altered or improved part / parts. In no event shall the seller or manufacturer of the product be liable for special, incidental, or consequential damages, including loss of profits, whether or not caused by or resulting from the negligence of seller and / or the manufacturer of the product unless specifically provided herein. This warranty shall not apply to any products or portions there of which have been subjected to abuse, misuse, improper installation or operation, lack of recommended maintenance, electrical failure or abnormal conditions and to products which have been tampered with, altered, modified, repaired, reworked by anyone not approved or authorized by the Company or used in any manner inconsistent with the provisions of the above or any instructions or specifications provided with or for the product. Any and all unauthorized onsite warranty work conducted by unauthorized personnel or any outside person(s), is not covered by the Company unless the work has been pre-authorized by a predetermined manufacturer representative. This excludes wearable parts and/or consumables.

Defective or failed material or equipment shall be held at the purchaser’s premises until authorization has been granted by the Company to return or dispose of defective products. Products returned for final inspection must be returned with a manufacturer authorized Return Material Authorization (RMA). Any unauthorized return of equipment will be declined at the dock by the Company. Any non-approved items returned with approved returned items are subject to rejection and will not be credited. Credit will be issued for material found to be defective upon the Company’s inspection based on prices at time of purchase.

To obtain a Material Safety Data Sheet and/or a copy of the CE Declaration of Conformity please contact National. This product is CE compliant.

TO OBTAIN SERVICE CONTACT NATIONAL FLOORING EQUIPMENT, INC. TOLL FREE AT 800-245-0267 FOR A REPAIR AUTHORIZATION NUMBER. COD FREIGHT RETURNS WILL NOT BE ACCEPTED. FREIGHT COLLECT SHIPMENTS WILL NOT BE ACCEPTED. WARRANTY REPAIRS MUST BE ACCOMPANIED BY DATE OF PURCHASE RECEIPT AND A RETURN/REPAIR AUTHORIZATION NUMBER.

RETURN/REPAIR AUTHORIZATION NUMBER: _____
MACHINE SERIAL NUMBER: _____

2.1 Safety details

The person in charge of safety shall be responsible for informing workers about the risks associated with dust collector operation.

The obligation also exists of training workers so they are able to protect themselves and others.

Failure to observe basic safety regulations and warnings could cause accidents during dust collector operation, maintenance and repair. Accidents can often be avoided by recognising potentially dangerous situations before these occur. Operators should be aware of potential hazards and be trained and skilled enough. They should also have the tools necessary to perform these duties properly.

NFE shall under no circumstances be deemed liable for accidents or damage caused by use of the dust collector by personnel not properly trained or who use it in an improper manner, as well as by even partial failure to comply with the safety regulations and intervention procedures indicated in this manual.

The safety warnings and warning notices are indicated in this manual and on the product.

Unless these hazard messages are heeded, the operator could become involved in accidents with serious consequences for him/herself and for other people.

The safety messages are highlighted by the following symbols:

Attention!
Unless these messages are heeded, operator injuries could occur.

Warning!
Unless these messages are heeded, dust collector damage could occur.

NFE cannot foresee all possible circumstances capable of representing a potential hazard. The warnings in this manual and on the products should not therefore be deemed exhaustive. In the event of tools, procedures, work or machining methods being used that are not explicitly recommended by ***NFE***, make sure no hazards exist for operators and others.

Only ever use original NFE spare parts.

NFE declines all liability in the event of non-original spare parts being used.

2.2 Safety warnings

Attention!
The following indications are, by themselves, not enough to fully protect against all the hazards that could arise during dust collector operation. These will have to be integrated with common sense and the experience of the operator, both of which are crucial factors for preventing accidents. Each section of this manual lists further specific safety warnings for the various operations.
Maintenance jobs must always be performed with the power plug detached from the power source.

The employer must inform and train the user according to the provisions of applicable laws.

Before using the machine, prepare and train yourself by reading this manual carefully. Use of the machine by untrained and unauthorized persons is forbidden.

Using the machine to collect toxic substances is forbidden unless this has been equipped with special filters required for the specific type of dusts. Such filters must be explicitly requested by you.

If the machine is used to collect toxic-harmful substances, the Longopac® container must be emptied and the filters cleaned using adequate individual protection devices, selected according to the type of substances to be collected.

Do not collect flammable materials or substances which could cause explosions (fuels, solvents, etc.). To collect such materials, the machine must be built with Anti-explosion Motor and Electric System and this must be requested by you explicitly.

Do not collect corrosive substances unless the machine is equipped with containers suitable for this purpose.

Use of the machine without the supplied filters is not recommended.

If the filters are correctly fitted, the machine will not eject any objects.

Never rest miscellaneous materials on the horizontal protection guard.

The machine casing containing moving parts must not be removed by the user.

When using the machine, mind other people, especially children.

Use the machine cautiously on slopes and ramps.

Do not change direction on gradients.

Make sure the parked machine remains stable by operating the braked wheel.

During cleaning operations, maintenance jobs, or when changing parts, the starter switch must be off and the machine must be disconnected from the power mains by removing the cable from the socket.

Only skilled persons should carry out repairs.

During use, mind the power supply cables and avoid crushing or pulling these.

Periodically check the mains power cable to ensure this is not damaged.

In the event of the cable being damaged, the machine must not be used.

In the event of the cable, plugs or couplings being replaced, make sure these are protected against water spray and check mechanical strength.

Never pull the machine by means of the power cable and the dust collector pipe.

Motor brushes must be replaced according to maintenance schedule. Always use original spare parts.

The user is responsible for disposing of collected substances in accordance with applicable laws.

After 10 years of use, we recommend sending the machine for a complete overhaul to ***NFE***.

In the event of Customers fitting a tool to the machine not supplied by ***NFE***, make sure the safety conditions are complied with and in any event, ***NFE*** is unable to accept liability for any problems arising from use of such tool.

The dust collector must not be operated in a corrosive or explosive environment.

Always make sure the dust collector is free of all foreign materials such as debris, oil, equipment and other objects that could affect operation and cause injury to persons.

Avoid using flammable or toxic solvents such as petrol, benzene, ether and alcohol for cleaning.

Avoid prolonged contact with solvents and inhaling their vapours. Avoid use close to open flames or sources of heat.

Never use the dust collector without the filter.

Do not collect lit cigarette ends. The filter could be damaged.

Do not collect petrol or flammable liquids in general.

Make sure all the guards and protection devices are in place and that all the safety devices are in place and working properly.

Do not wear loose or hanging clothing such as ties, scarves or torn garments that could become trapped and be sucked up by the dust collector.

Do not open the collect Longopac® container with the machine running.

The manual should always be kept handy for reference so the operating cycle can be checked every time there are doubts.
In the event of this manual being lost or damaged, ask ***NFE*** for a new copy.

Structural damage and improper alterations or repairs could change the protection capacity of the dust collector and therefore void the warranty.
Any alterations to the appliance must only be made by ***NFE*** engineers.

During maintenance jobs, affix a notice to the appliance indicating ***"MACHINE BEING SERVICED, DO NOT START".***

Climbing on the dust collector is forbidden.

Never touch electric wires, switches, buttons, etc. with wet hands.

Before connecting to the power mains, make sure the power voltage and frequency are those shown on the machine plate.

Make power connections to a mains supply with efficient earth system ground.

In the event of an extension cord being used, make sure this is in perfect condition, and that the cross section of the cable is suitable for the dust collector power input.

When restoring original working conditions, the appointed personnel should make sure that at the end of the operating procedure, proper dust collector operation safety conditions are restored, especially the safety devices and the protective guards.

Only adult persons should use the dust collector.

During collecting operations, always brake the dust collector using the special revolving wheel lock.

2.3 Safety plates and symbols

Plates are affixed to the dust collector showing safety symbols and/or messages.

Attention!
Make sure all the safety messages are legible.
Clean these with a cloth, soap and water. Do not use solvents, diesel fuel or petrol.
Replace the damaged plates with new ones supplied by NFE.
If a plate is affixed to a replaced part, make sure a new plate is affixed to the new part.

Attention!
Read the operator's and maintenance manual carefully before using the dust collector or doing any maintenance jobs.

WARNING!

- ***ONLY SHAKE THE FILTER WHEN THE MACHINE IS TURNED OFF***

IMPORTANT

DO NOT BREATHE IN FLAMMABLE AND/OR EXPLOSIVE LIQUIDS OR POWDERS

Warning!
Risk of crushing upper limbs while fitting and locking the material Longopac® container on the dust collector.
Never place hands between the material Longopac® container and dust collector while locking.
Do not place hands on sides of Longopac® container near the guide pins while locking.
Perform the Longopac® container locking operation by means of the levers located on the side, USING BOTH HANDS!

2.4 Outstanding risks

Careful analysis of risks performed by the manufacturer and stored in the technical file has made it possible to eliminate most of the risks associated with dust collector operation.

The manufacturer advises carefully following the instructions, procedures and advice contained in this manual as well as applicable safety regulations, including the use of the envisaged protection devices, both those integrated in the dust collector and individual.

Outstanding risks associated with the dust collector could be:

Electrical maintenance risks caused by the need to work under power.
Only trained personnel should work on the machine with the power supply connected and this must have double earth insulation.

Risk of improper use in the presence of explosive and flammable substances.
The dust collector must not be used in environments containing substances in the form of liquids that could vaporize at room temperature and flammable dusts and gas.

Risks of operation in humid environments.
Keep to the limits shown in this manual at section 1.6 Allowed environmental conditions.

Risk of erroneous interpretation of the safety pictograms.
Having identified the various outstanding risks, the manufacturer has affixed to the dust collector a number of hazard labels in compliance with regulations relating to the graphic symbols to be used. The user must immediately replace any safety plates that become illegible due to wear or damage.

Attention!
Removing the safety plates on the dust collector is strictly forbidden. The manufacturer declines all liability in relation to dust collector safety in the event of failure to comply with the above indications.

3.1 Handling

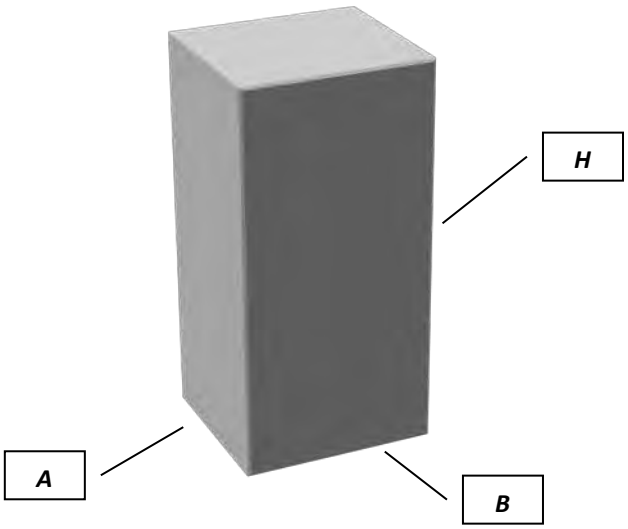

A (in)	*B (in)*	*H (in)*	*Weight (package included) (lb)*
28.7 (73 cm)	33.9 (86 cm)	70.9 (180 cm)	176.4 (80 Kg)

Transport the package using a fork-lift truck of adequate lifting capacity and make sure it is stable and that weight is properly distributed on the forks.

Before starting to move, make sure the transit area is free and that there are no moving objects on the packaging.

During movement, keep the load low for greater stability and safety.

When starting up the dust collector, move it by means of the wheels supplied.

The appliance must never be moved using fork-lift trucks or other equipment that lifts it off the floor.

If for any reason the need arises to lift and transport the dust collector, this operation must be performed under the responsibility of the user. The user is therefore invited to secure the load as he best thinks fit to ensure the operation is performed in total safety.

3.2 Installation

Warning!
Before installing the dust collector, carefully make a sight check to pinpoint any damage suffered during transport.

In the event of any component parts being damaged, do not proceed with installation. Notify the manufacturer and reach an agreement on how to proceed.

The dust collector already features a suction filter.

Fit the equipment or accessory required for the type of collecting operation on the opposite end of the hose.

Contact your dealer for information relating to the different types of optional accessories available for this specific dust collector model.

Fit the supplied connector on the pipe union.

Fit the supplied pipe in the connector.

Make sure the power supply corresponds to the voltage and frequency indicated on the dust collector plate.

Important!
Do not fit the plug in the power socket with wet hands.

Attention!
In the event of an extension cord being used, make sure this is in perfect condition, in compliance with CE standards and with cable cross section suitable for the power input of the dust collector.

4.1 Description of controls

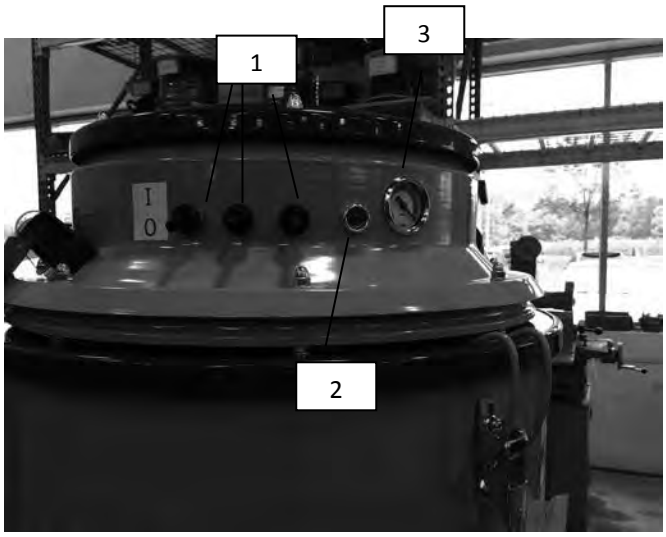

1) ***START/STOP*** buttons (three switches, one for each motor)
2) Power on light indicator
3) Filter pressure drop gauge

4.2 Work cycle

Warning!
Before fitting the plug, make sure the power voltage corresponds to that on the marking plate.

- Make sure the power plug is correctly fitted in the power socket.
- Make sure the flexible hose is properly fitted and locked in the dust collector pipe union.
- Make sure the power cable and any extension cord used are integral and in perfect condition.
- Block the dust collector by means of the retainer provided.

- Grip one end of the flexible hose complete with selected accessory.
- Press the ***Start*** button and start collecting.
- To stop the dust collector, press the ***Stop*** button.

Warning!
Before switching the dust collector back on, make sure the motors have come to a complete halt.

- After finishing work, disconnect the dust collector from the power socket.

To move the dust collector, use the large handle.

Important!
The dust collector can be moved only on flat ground!
If the dust collector is moved on inclined grounds, you can risk to lose the control, because of the weight, and to damage persons or things.

Attention!
During collecting, avoid rolling up or bending the flexible hose.

4.3 Removal and placing of the waste bag

Stop the dust collector motors by pressing the relevant ***STOP*** buttons.

Warning!
Disconnect the plug from the power socket.

- Use two ties to fasten the collection bag at two points (about 1.2-2 in. or 3-5 cm. from each other), just below the filter chamber.
- Cut off the bag in the position between the two ties.
- Remove the lower part of the bag.

- Pull down a length of new bag from the chamber, until it reaches the bottom support plate

Attention!
Used bags should be disposed of into a special waste disposal container.

4.4 Using the filter shaking system

This operation must only be performed with the machine switched off once the motor(s) has come to a complete halt.
The filter shaking system is best operated every time before use and after prolonged operation.

Caution!
During collecting, avoid rolling up or twisting the flexible hose

On the front of the dust collector, a filter pressure drop gauge indicates the degree of vacuum inside.
If the gauge indicates a high drop in pressure (while the dust collector is working and the collecting inlet is disconnected from any equipment or accessories), the filter will have to be shaken by means of the special lever. If the pressure gauge remains high, clean or replace the filter.

Caution!
Never use the machine with the filter blocked

Caution!
If the arrow of the filter pressure drop gauge stays in the red area even after cleaning the filter, the hose or suction accessory could be blocked. In this case, clean and remove the blockage.

Note: *For additional maintenance or repair information, reference this machine's service manual.*

4.5 Troubleshooting

Fault found	***Possible cause***	***Recommended remedy***
The dust collector fails to start	No power	Check the power mains supply Check the integrity of the plug and power cable
	Thermal magnetic switch tripped	Reset the thermal magnetic switch
Dust is leaking out	Perforated collect pipe	Replace the pipe
	Filter unsuitable for type of job	Fit a suitable filter for the type of material to be collected
The dust collector does not work as it should	Pipe perforated or blocked	Check the pipe and, if necessary, replace it
	Bag full	Empty bag
	Filter blocked	Clean the filter and if necessary change it
	Seals worn	Check the seals and, if necessary, replace them
	Air leak	Check for any air leaks out of closing fasteners, tightening screws, Longopac® container or filter chamber
Motor very noisy.	Contact NFE customer service	

Warning!
For any other problems, contact the NFE customer service

NATIONAL FLOORING EQUIPMENT

Made in America Since 1968

9250 Xylon Avenue N • Minneapolis, MN 55445 • U.S.A.
Toll-free 800-245-0267 • Phone 763-315-5300 • Fax 800-648-7124 • Fax 763-535-8255
Web Site: www.nationalequipment.com • E-Mail: info@nationalequipment.com